When printing, select "print as image" from the print menu.

Polygon Clad Brick Mould Casing – Field Service Guide

Field Applied Installation Instructions For 1 5/16″ and 1 5/8″ Casing

MARVIN Windows and Doors

ATTENTION: These instructions pertain only to polygons or mulled units with 90 degree corners at the sill. Read ENTIRE instructions before attempting to install clad brick mould casing.

WARNING: Practice safety! Wear safety glasses or goggles and appropriate hearing protection when cutting and assembling brick mould casing components.

STANDARD PARTS SHIPPED

ILLUSTRATIONS (not to scale)	DESCRIPTION AND COLOR	PART/PROFILE NUMBER
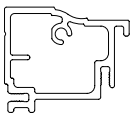	Clad brick mould casing	A898 – 1 5/16″ or A228 – 1 5/8″
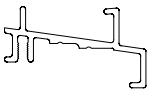	Subsill (not used on door products).	A246
	Frame kerf weatherstrip.	15910100
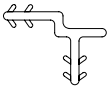	Connecting barb.	V087
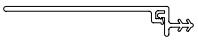	Jamb/sill nailing fin (as required for specific product configurations).	V499
See below	Polygon field applied package	11850123

POLYGON FIELD APPLIED CBMC PACKAGE 11850123

ILLUSTRATIONS (not to scale)	DESCRIPTION AND COLOR	PART/PROFILE NUMBER
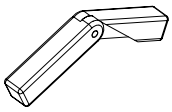	Three 2″ Pivoting corner keys.	11870477
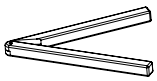	Two 6″ Pivoting corner keys. For angles sharper than 45°.	11870479
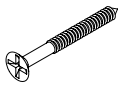	Three #8 x 1 1/2″ Phillips flathead stainless steel screws.	11808110
	Three #8 x 2″ Phillips flathead stainless steel screws. For angles sharper than 45°.	11800724
	Twelve #8 x 5/8″ Phillips panhead stainless steel screws (not used on door products).	11800498
	Seven #7 x 5/8″ Phillips flathead stainless steel screws.	11800734
	Polygon Installation Instructions	11708097

YOU WILL NEED TO SUPPLY

Safety glasses	Hearing protection
Rubber mallet	Utility knife
Screen spline roller	Hacksaw
Chisel	Hammer
Angle finder	7/64” drill bit
Protractor	Countersink bit for metal (82 degree)
2′ – 3′ straightedge	1″ x 3″ x 3/16″ wood shim (scrap)

Compound power miter box saw with metal cutting blade
Power drill/driver with Phillips head screw bit
Sealant – *Grade NS Class 25 per ASTM C920*

POLYGON CLAD BRICK MOULD CASING FRAME PREPARATION

1. Lay unit on a flat surface with the exterior side of the unit facing upward. Remove any standing blocks from sill of unit. Remove nailing fin around perimeter of frame if it was factory applied.
2. It will be necessary to notch the frame accessory kerf prior to installing the clad brick mould casing. This will allow jamb casing to seat against the subsill. The jamb corners at the sill (see exceptions below) must be notched as shown in illustration 1 as indicated by specific product type. Use a hacksaw or hammer and chisel to accomplish this step.

NOTE: Do not notch sill jamb corners on door products. Also, mulled Double Hung or Glider Products should not be notched on the sill at the mull joint.

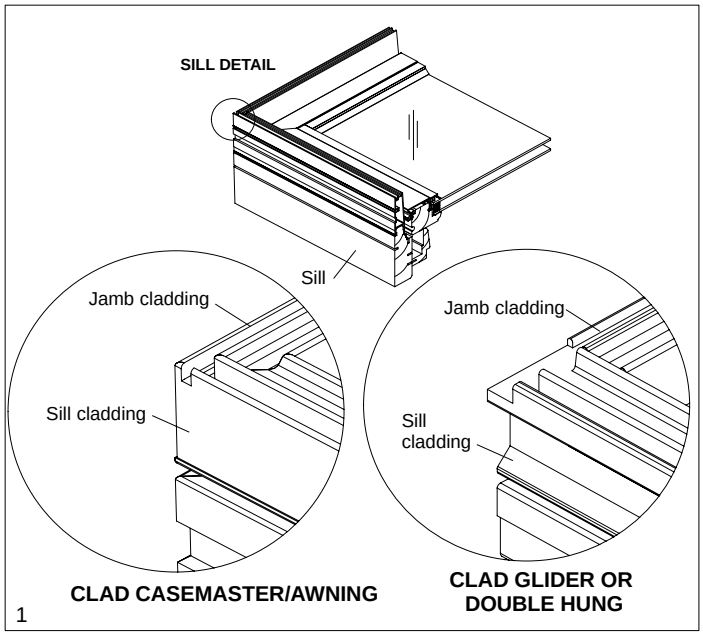

ATTENTION: Specifications and technical data are subject to change without notice.

3. It will be necessary on multiple units to ensure mull cap does not extend into the kerf. This will allow CBMC to pass by the mullion area without modification. Remove excess material in a horizontal fashion to open the kerf. Cut this notch using a hammer and chisel. See illustration 2. On space mulled units where A148 outside frame trim is installed, notching is not necessary. Remove trim from sill, head jamb, and/or jambs before proceeding.
4. Apply silicone sealant at all mull joints where cladding has been notched. See illustration 2.

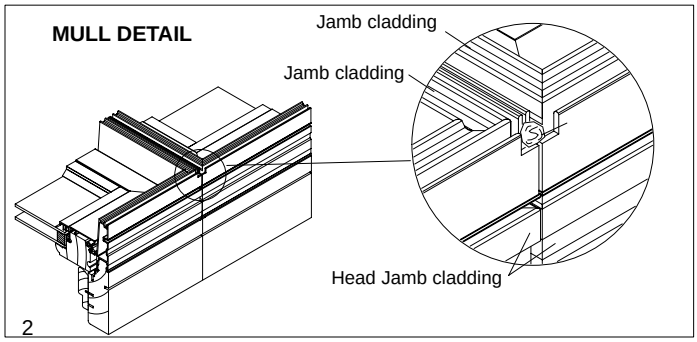

5. Install frame kerf weatherstrip around frame kerf perimeter using a screen spline roller. If possible splice at top corners ensuring there is no gap at the splice. See illustration 3.

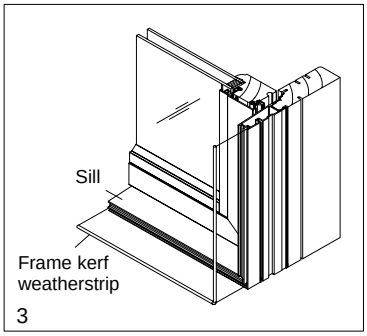

NOTE: If you are installing clad brick mould casing on a door product, skip to step 8.

FABRICATION PROCEDURES

CAUTION: To avoid binding and risk of possible injury place a shim under CBMC while cutting to provide support while positioned in the power miter box. This applies to all steps below that involve cutting on a power saw. Always wear proper eye and ear protection while cutting.

6. Measure outside width of unit and add the appropriate length according to the table below. Using a power miter saw cut subsill to measured length. Measure and mark both ends of subsill using table below. Notch ends of subsill by removing ridged material with a hacksaw or chisel as shown in illustration 4.

Casing	Added Subsill Length	End Notch Length
1 5/16″	2 5/8″ (67)	1 1/2″ (38)
1 5/8″	3 1/4″ (83)	1 13/16″ (46)

7. Using the appropriate template in illustration 5 below, mark ends of subsill and drill a pilot hole with a 7/64” drill bit through top of subsill.

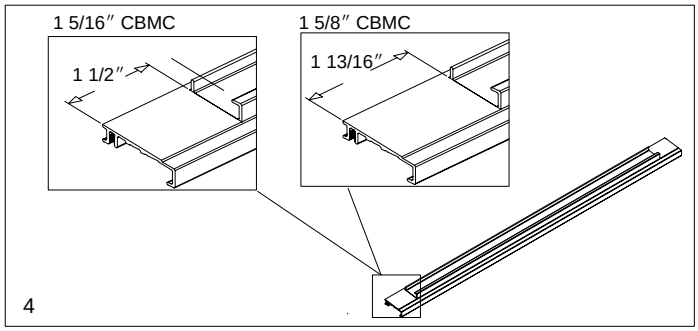

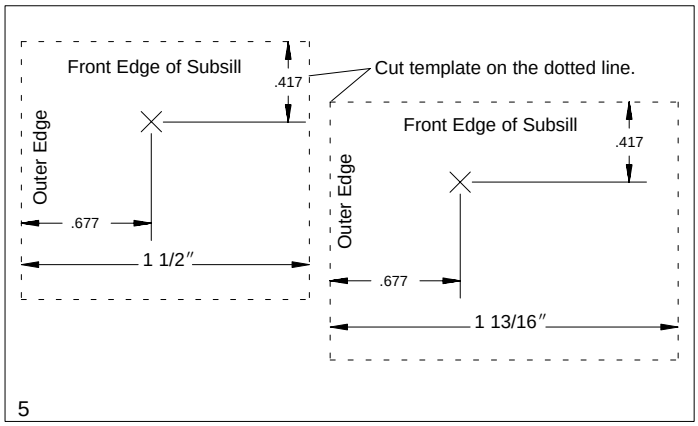

8. Using an angle finder and protractor determine which corner on unit has the sharpest angle. See illustration 6. Divide that number by two. Set power miter saw to calculated angle and cut one end of CBMC.

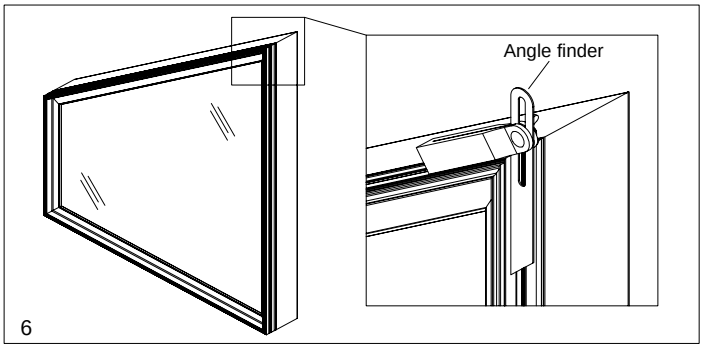

9. Place CBMC on frame with inside corner of mitered end on outside corner of unit frame. Temporarily place next CBMC (that will join with previously cut CBMC) so that it touches the inside corner as shown in illustration 7.

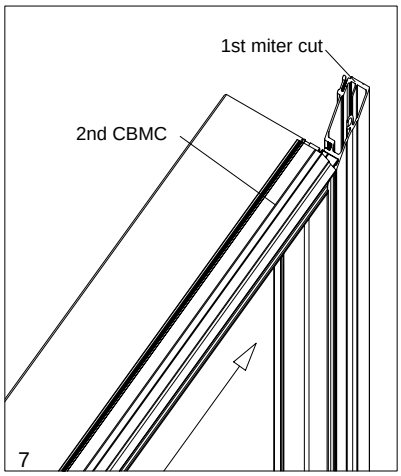

10. Using a straightedge, transfer the angle to the second CBMC as shown in illustration 8. Remove and cut the angle scribed on the CBMC with a power miter saw. Ensure the cutting line remains visible.

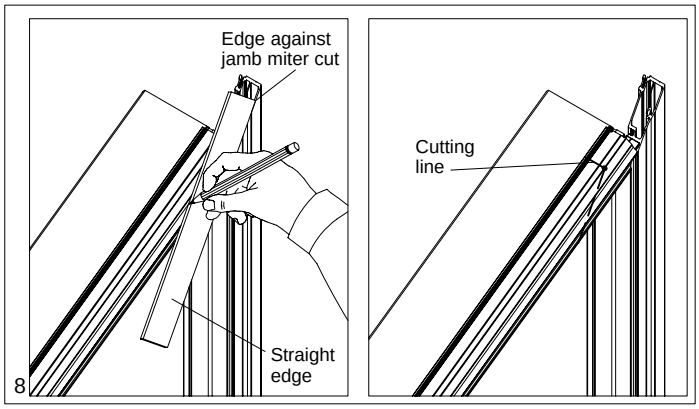

11. Temporarily install both pieces of CBMC to ensure miter joint is tight.

12. Next, mark the inside edge of second CBMC at corner of unit. See illustration 9. Remove CBMC and determine angle with an angle finder and protractor. Repeat steps 8–12 until all sides are cut (excluding sill ends).

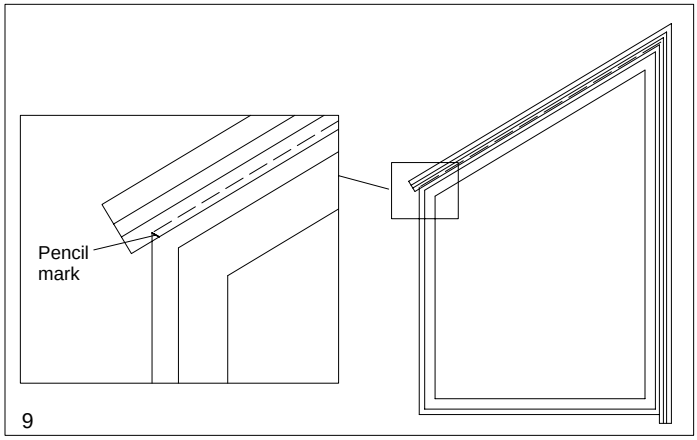

9

13. Once all sides have been cut to fit properly, remove all CBMC except those pieces which will extend down to the sill. Temporarily install subsill (window products only) and slide against the inside of the CBMC as shown in illustration 10.

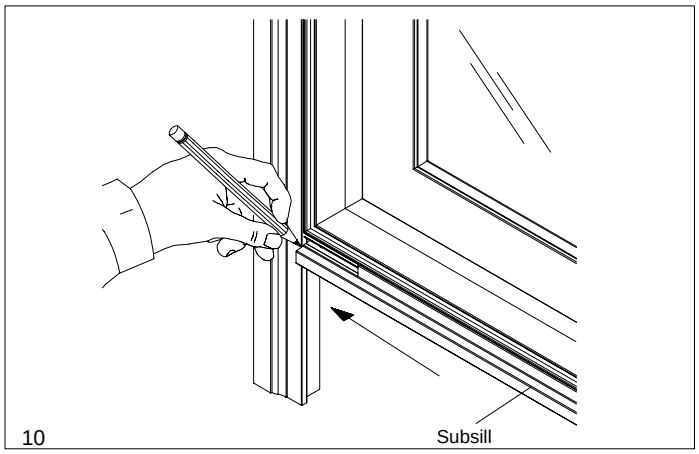

10

14. Use a straightedge and mark the bottom of the casing as shown in illustration 11 ensuring the subsill is pushed firmly against the sill.

NOTE: On door products simply use the top of the existing sill to transfer the cutoff line. Accomplish this task for both lower jamb casings.

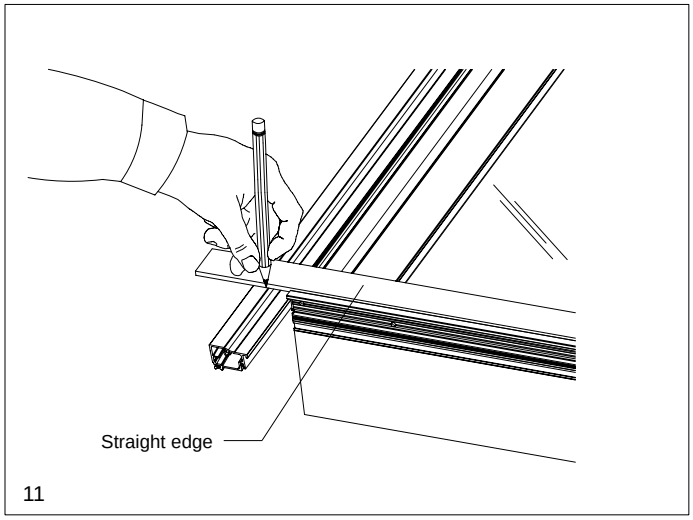

11

15. Remove and cut as shown in illustration 12. Ensuring the cutting line remains visible. Check fit, then remove subsill and jamb CBMC.

NOTE: Window products are cut at an 8 degree bevel, while doors are cut at 90 degrees.

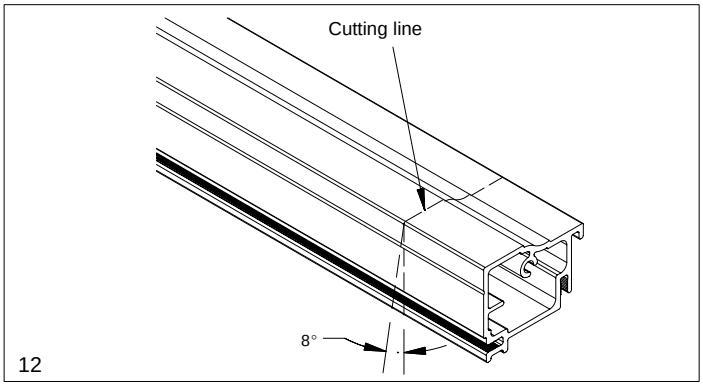

12

16. Place the subsill into sill kerf, ensuring subsill extends past the jambs an equal distance on each side. Secure with #8 x 5/8″ self tapping panhead screws every 6″– 8″ (152–203). See illustration 13.

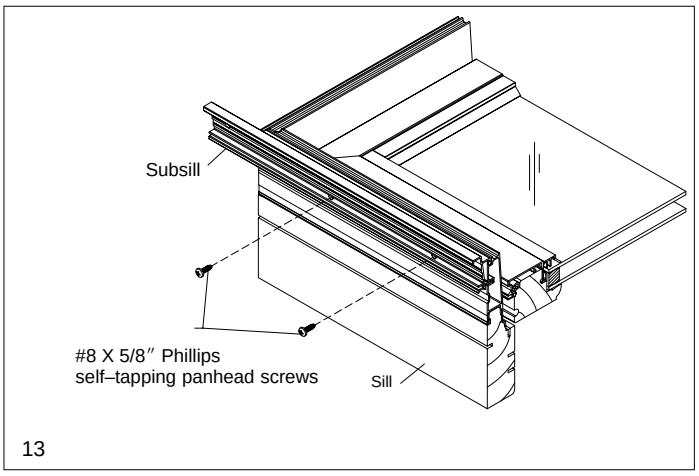

13

17. Apply silicone sealant at the point where the subsill and jamb meet and continue under the sill running a bead the full length of the sill. See illustration 14.

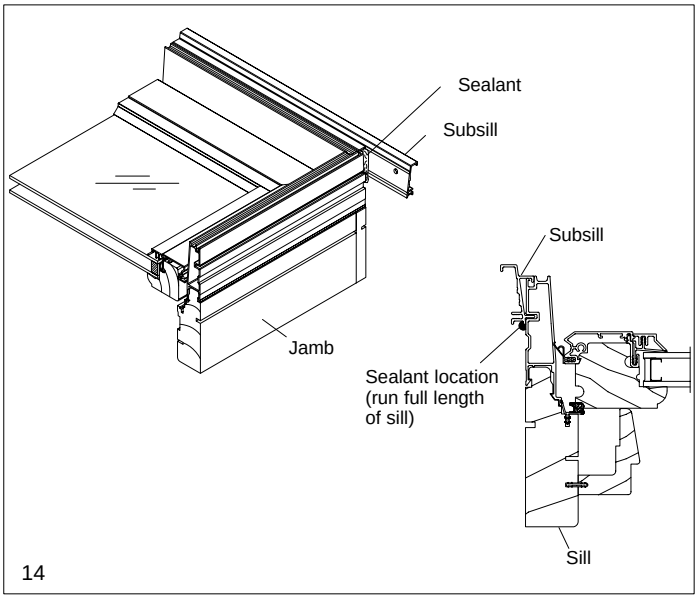

14

18. For door products, apply silicone sealant from the top edge of the jamb cladding at the sill to beyond the jamb accessory kerf as shown in illustration 15.

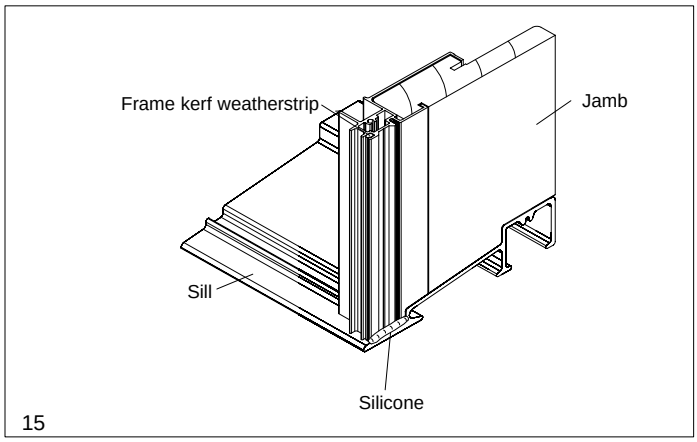

15

INSTALLATION PROCEDURES

19. Starting with first CBMC piece cut, insert appropriate corner key (2″ for 45 degrees or higher, 6″ for angles sharper than 45 degrees) in end of CBMC as shown in illustration 16.

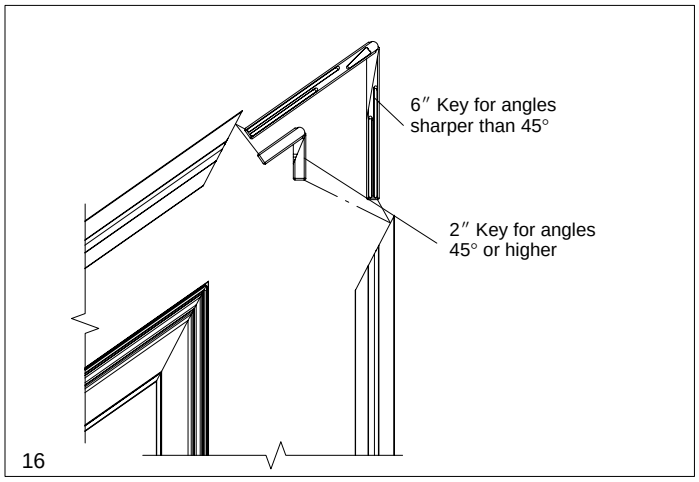

16

20. Drill pilot holes through CBMC and corner key with a 7/64″ drill bit using the line on the CBMC as a guide. Countersink hole with a countersinking bit. Refer to the illustration 17 and chart below to determine the distance from miter and amount of holes to drill.

FRAME ANGLE	180 – 45 degrees	45 – 40 degrees	40 – 30 degrees	30 – 20 degrees
First screw hole	1 1/2″ (38)	2″ (51)	2.5″ (64)	3 1/2″ (89)
Second screw hole	N/A	3 1/2″ (89)	4″ (102)	6″ (152)

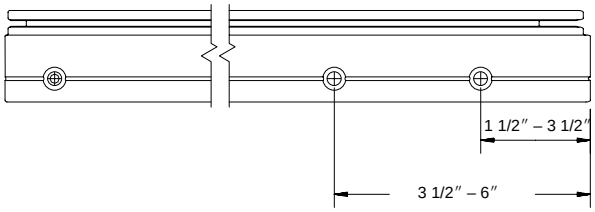

17 Angles 45° to 180° receive only one screw hole

21. Fasten corner key to CBMC using a #8 x 5/8″ flathead screw to first hole and if necessary a #8 x 1 1/2″ flat head screw to second hole. See illustration 18.

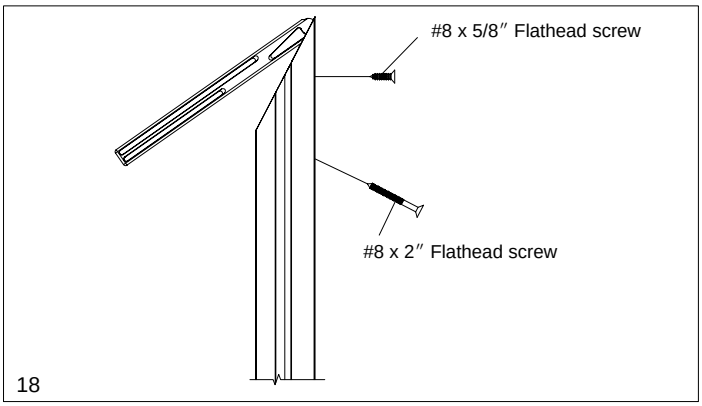

18

22. Assemble all CBMC components in the same manner as described in steps 18–20. Make sure all miter joints are tight. See illustration 19.

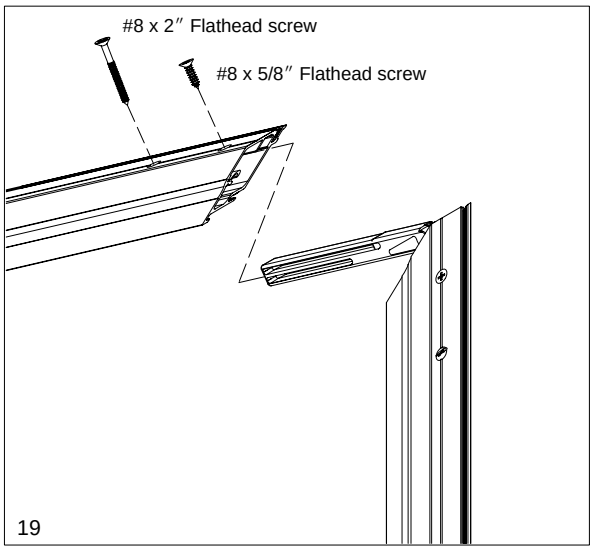

19

23. Insert V087 connecting barb into frame accessory kerf as shown in illustration 20.

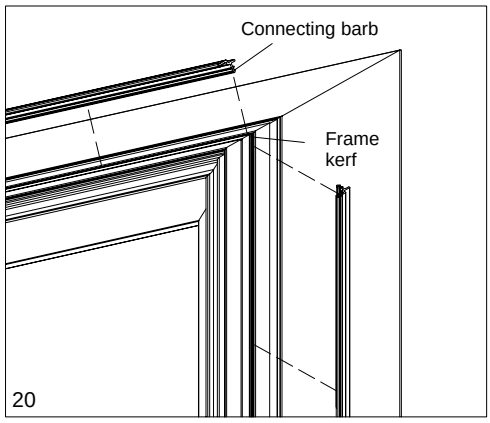

20

24. Install CBMC assembly on frame. Press CBMC into connecting barb and kerf by hand then secure firmly with a rubber mallet. See Illustration 21.

CAUTION: Do not force if binding occurs as damage may result to the frame and brick mould casing.

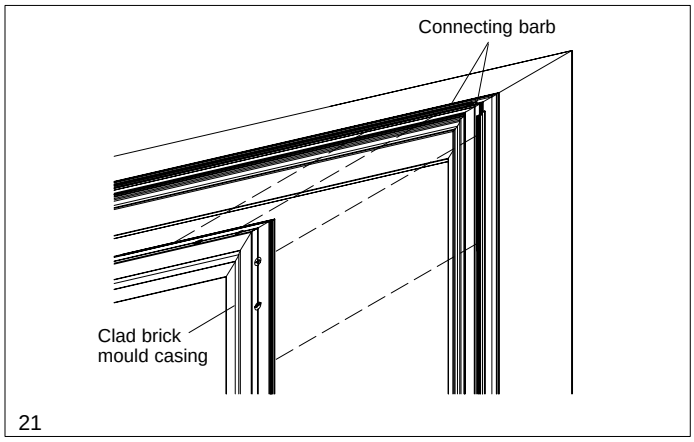

21

25. For door products skip this step and proceed to step 25. Secure lower jamb casing to subsill with a #8 x 1 1/2″ flat head screw as shown in illustration 22.

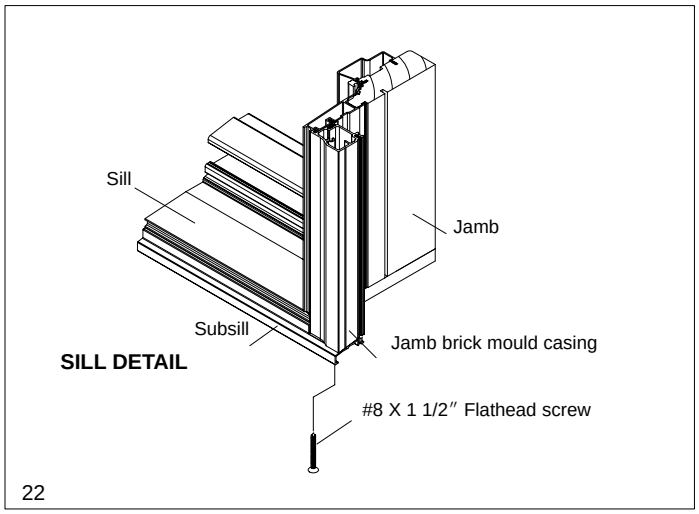

22

APPLYING NAILING FIN

26. Attach nailing fin to CBMC accessory kerf and subsill where applicable. See illustration 23.

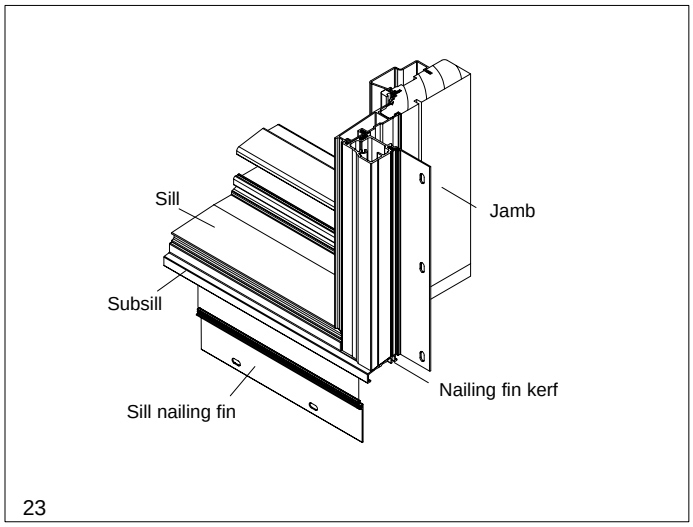

23

APPLYING SEALANT

27. Apply silicone caulking on the back side of unit at joints before installing in opening as shown in illustrations 24 and 25. Be sure to tool out the caulking for best performance as shown in illustration 26.

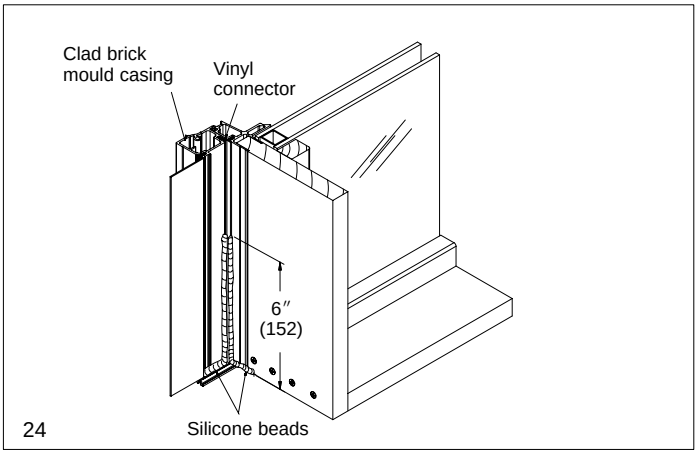

24

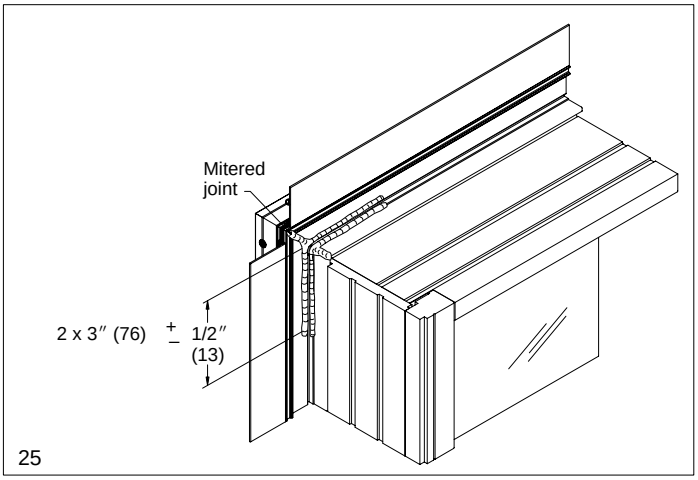

25

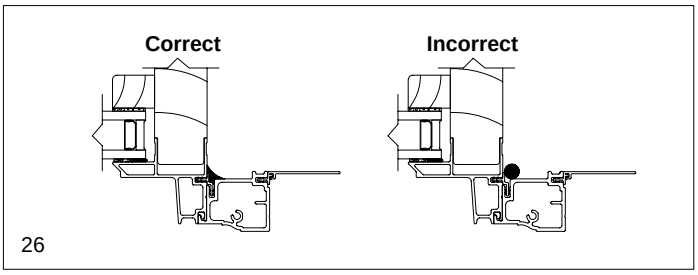

26